MICROCONTROLLER CONTROLLED, MULTIFREQUENCY ELECTRICAL IMPEDANCE TOMOGRAPH

V.E. Arpinar, B. M. Eyuboglu

Middle East Technical University, Dept. of Electrical and Electronics Engineering, Ankara, Turkey

ABSTRACT

In this study, development of a microcontroller-controlled-multifrequency electrical impedance tomography (EIT) system is aimed. In this system, current injection and voltage measurements are performed by means of surface electrodes. Data acquisition protocol can be programmed via a PC and contolled by a microcontroller. System process the measured signal using continuous time quadrature demodulator. After that, it converts analog information to digital and transfers it to the PC.

Keywords:
electrical impedance tomograph, multifrequency

INTRODUCTION

Electrical Impedance Tomography (EIT) is a technique that produces images of impedance distribution in a slice through a volume conductor body, by means of electrical measurements made on the surface of the conductor. Electrical measurements are then used to reconstruct images of impedance distribution. Since different tissues have different impedances, it is possible to characterize tissues in impedance images and to monitor physiological events [1].

In conventional EIT imaging methods, current is applied at a single frequency. Impedance of biological tissues are not purely resistive but they also exhibit a reactance component, due to the cell membranes [2]. Frequency dependent behavior of tissue impedances may also have diagnostic value. For this purpose, EIT systems capable of making impedance measurements at various frequencies are needed.

DESIGN

The principle of the data acquisition system is based on four-electrode impedance measurement system as shown below. 16 electrodes are placed around the object to be imaged. A sinusoidal current with frequency range 10kHz to 100kHz is applied between a pair of electrodes, which are called current electrodes. The current can be switched between different electrode pairs by means of analog multiplexers. Potential values are measured at the remaining electrodes. Selection of measurement electrodes is made by using analog demultiplexers.

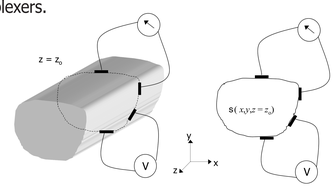

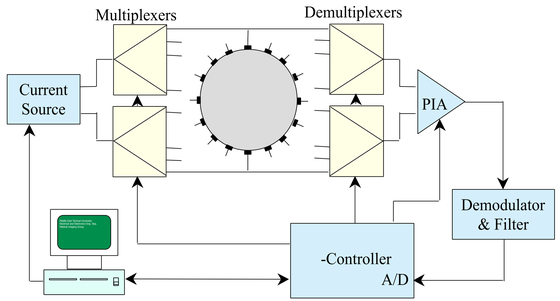

Electrical Impedance Tomograph Overview

In our system, microcontroller's (Microchip 16C774) "Parallel slave port" connected to the ISA bus of a PC. Using this connection, microcontroller can be programmed at the beginning of each session. The PC transfers the current injection and measurement protocol to the microcontroller. The samples of the current pattern, which define the frequency of the applied current, are also sent by the PC. Microcontroller selects the current and the measurement electrodes and applies the current according to the user defined protocol. Measured data can be transferred to the PC for further processing and image reconstruction.

Different blocks of the design are described below:

A. Current Source

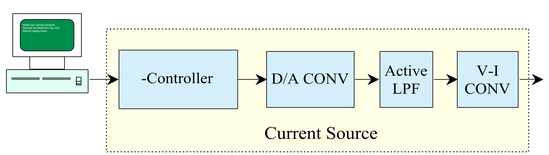

Current source composed of a microcontroller (Microchip 16C774), D/A converter (National DAC 0808), active low pass filter (LPF), and V-I converter. PC calculates and sends the sample values and time difference between the samples (t) to the microcontroller. According to the data send, microcontroller changes digital input of D/A converter. The analog signal generated from A/D converter filtered from its higher harmonic components in 2nd order Butterworth LPF (Burr Brown UA42AP). Output of the LPF is converted to current using V-I converter and also used as a reference for demodulation of the measured signal.

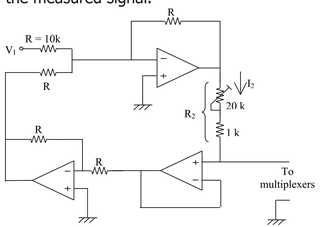

Voltage to current converter circuit

- V-I converter has constant gain and 0°/180° phase shift. In order to satisfy this condition ultra low noise precision opamps (Burr Brown OP37G) are used. Simulation results demonstrated that, the gain and the phase of the V-I converter is 0.9999 A/V and 179.67° respectively.

B. Multiplexers and Demultiplexers:

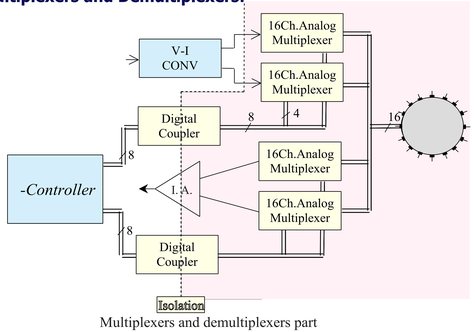

Multiplexers and demultiplexers part

The output of the current source should be directed to the current injection electrodes and also measured signal should be directed to the isolation amplifier. For this purpose, analog mutiplexers (Analog Devices ADG406) are used. Analog multiplexers has low (50 ±4) resistance and low switching time (200ns). Patient should be isolated from the system for the safety purposes. For digital isolation uni-directional digital couplers (Burr Brown ISO 508) are used. The propagation delay time of is 1 s which is small compared to standard optocoupler method.

C. Voltage Measurement Circuit

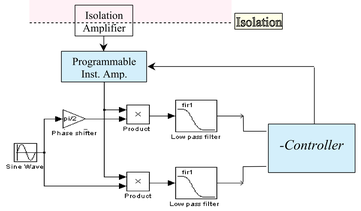

Voltage measurement circuit.

Following the analog demultiplexers, low distortion isolation amplifier (Analog Devices AD215) is used. For increasing the dynamic range of the system, a digitally controlled gain instrumentation amplifier is connected. To recover the imaginary and real part of the signal, continuous quadrature demodulator is used. For analog multiplier, wide bandwidth precision analog multiplier with ±0.5% maximum four-quadrant accuracy (Burr-Brown MPY634) is used. For LPF (Burr-Brown UFA42) is used in 3rd order Butterworth configuration. After the low pass filtering the signal is converted to a digital signal by using 12 bit ADC within the microcontroller. This information is send through to the PC using the parallel slave port of the microcontroller.

CONCLUSION

In this study, a microcontroller controlled programmable, multifrequency EIT data acquisition system is designed. In this system, the measurement protocol is defined by the user and downloaded to the microcontroller via a PC. In addition, the range of frequencies to be used are also programmable. Measured signal is demodulated by continuous-time quadrature demodulator to obtain both in-phase and quadrature components. After demodulation, signal is fed to A/D converter. The resulting digital signal is transferred to the PC by the microcontroller for further processing and image reconstruction. With this method it is possible to collect fully computer controlled data.

ACKNOWLEDGEMENT

This work is supported by Turkish Scientific and Technical Research Council (TÜBITAK) Research Grant EEEAG-198006.

REFERENCES

[1] B. Rigaud and J. P. Morucci "Bioelectrical impedance techniques in Medicine Part III: Impedance Imaging, Medical Applications," Critical Reviews in Biomedical Engineering, pp. 622-677, 1996.

[2] B. H. Brown, A. D. Leathard L. Lu, W. Wang and, A. Hampshire "Measured and expected Cole parameters from electrical impedance tomographic spectrophy images of the human torax," Physiological Measurement 16(Suppl. 3A), A57-A67, 1995.